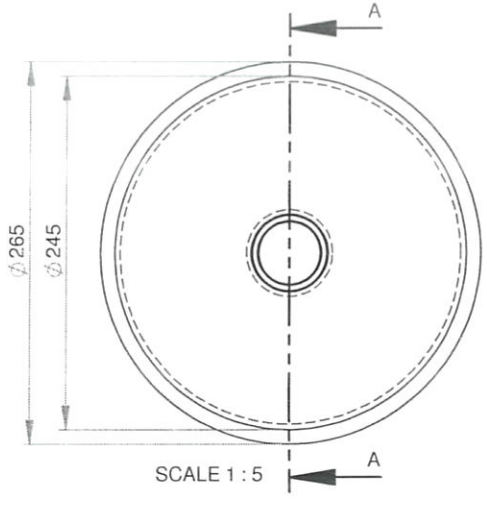

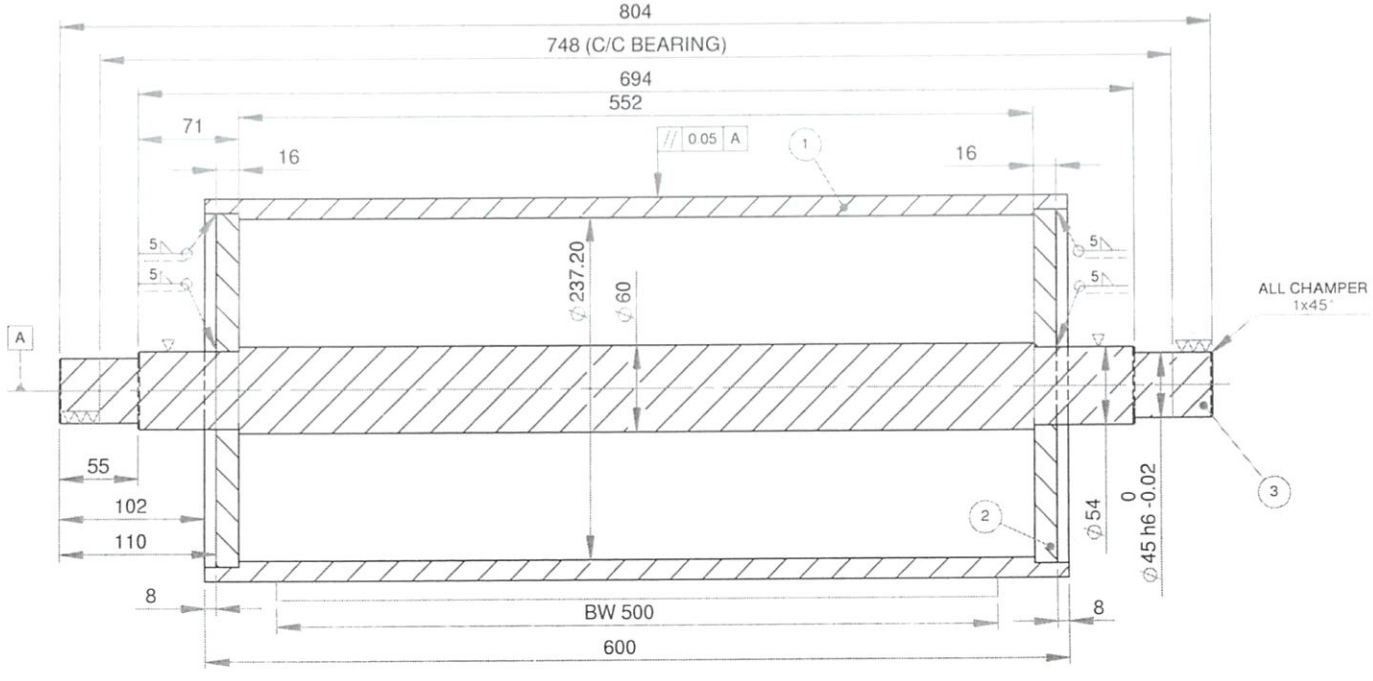

SECTION A-A
SCALE 1 : 5

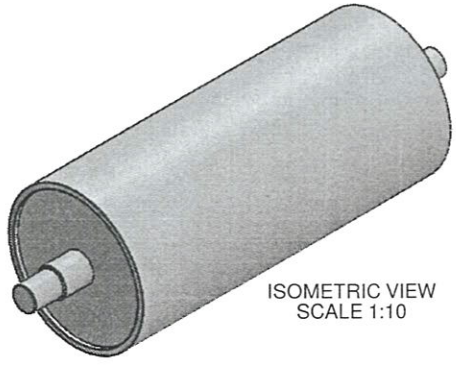

ISOMETRIC VIEW
SCALE 1:10

** INCOMING PART WILL BE CHECK. IT WILL RETURN IF NOT PASS **

POLISHING	GRINDING	NORMAL MACHINING (SMOOTH SURFACE)	NORMAL MACHINING (ROUGH SURFACE)
▽▽▽▽	▽▽▽	▽▽	▽

POS	DESCRIPTION	QTY	MATERIAL	REMARKS
3	SHAFT	1	S45C	-
2	HOLDER SHAFT	2	SS400	-
1	BODY	1	STEEL PIPE 10" SCH 80	-

FILE DIR:
\\192.168.4.15\mechanical\Draft Nuryana\Proyek Pak Dadang\Tail pulley\Tail pulley BC-1\

SCALE: 1:10 | DIM: mm | ASSY NO.

DIM: mm	NAME	DATE
DRAWN	ENDEN	12/7/2017
DESIGN	AVAILABLE	
CHECK	YESSIKO	
APRV	RULLY	
CANCEL DWG NO.		
REFF DWG NO.		

MECHANICAL ENGINEERING SECTION

TITLE BELT CONVEYOR 1

TAKE UP PULLEY

SCG | PT SCG LIGHTWEIGHT CONCRETE INDONESIA | A4 | 2012-DWG-RMA-BC01-M-010B | REV NO. | PAGE 1