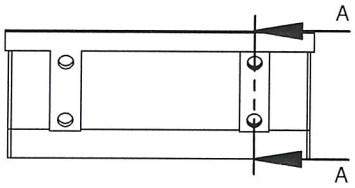

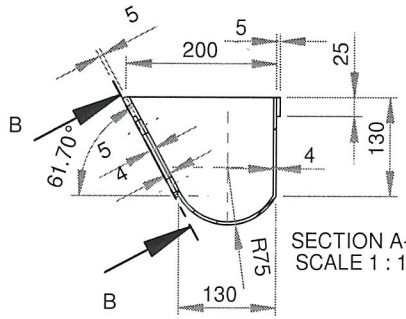

SECTION A-A
SCALE 1 : 10

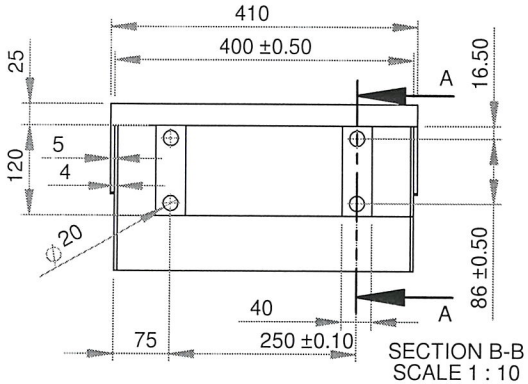

SECTION B-B
SCALE 1 : 10

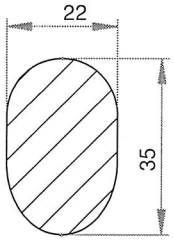

SECTION E-E
SCALE 2 : 3

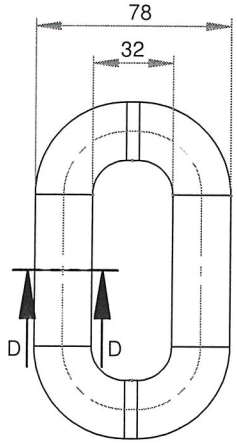

SCALE 1:3

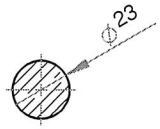

SECTION D-D
SCALE 1 : 3

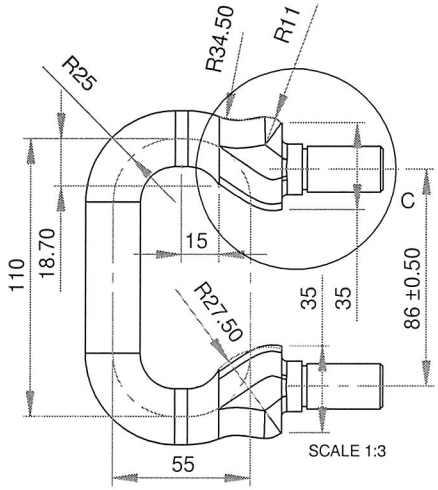

SCALE 1:3

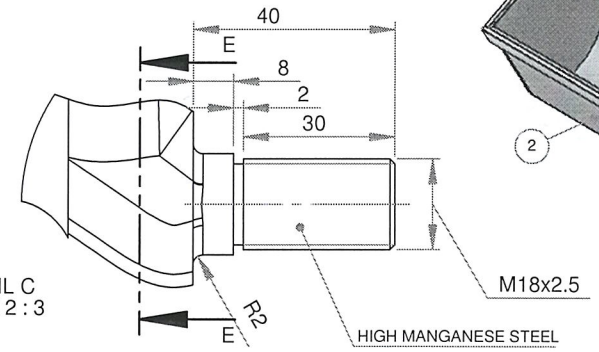

DETAIL C
SCALE 2 : 3

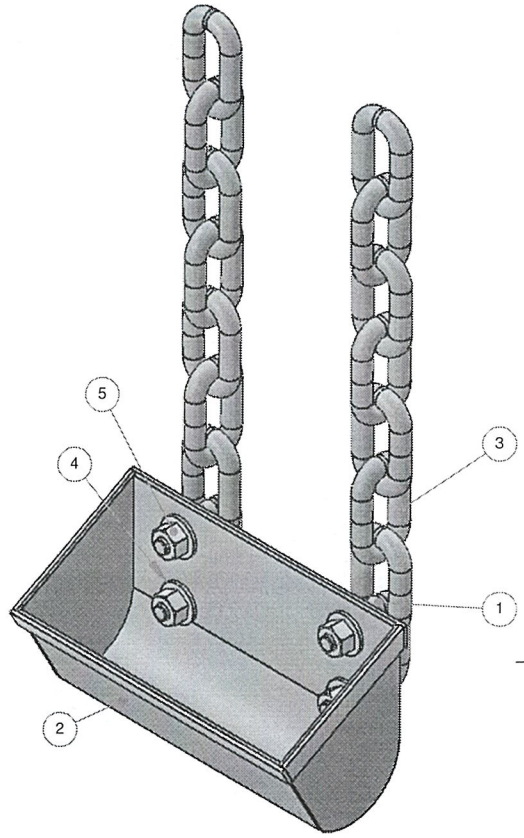

ISOMETRIC VIEW
SCALE 1:8

** INCOMING PART WILL BE CHECK. IT WILL RETURN IF NOT PASS **

POLISHING	GRINDING	NORMAL MACHINING (SMOOTH SURFACE)	NORMAL MACHINING (ROUGH SURFACE)
▽▽▽▽	▽▽▽	▽▽	▽

POS	DESCRIPTION	QTY	MATERIAL	REMARKS
5	NUT M18x2.5	2	HTBN 8.8	-
4	WASHER PLATE M18	2	SPRING STEEL	-
3	CHAIN EYE	14	HIGH MANGANESE STEEL (FORGING)	CASTING PROCESS WILL BE ACCEPTABLE
2	BUCKET	1	ANTI WEAR PLATE	HARDOX 500 OR COMPATIBLE
1	LOCKING CHAIN	2	HIGH MANGANESE STEEL (FORGING)	CASTING PROCESS WILL BE ACCEPTABLE

FILE DIR:
\\192.168.4.15\mechanical\Draft Nuryana\Proyek Pak Yessiko\Bucket elevator\

SCALE: 1:20 | DIM: mm | ASSY NO.

DIM: mm	NAME	DATE
DRAWN	ENDEN	03-Sep-18
DESIGN	AVAILABLE	3/9.18
CHECK	YESSIKO	
APRV	M. NUGRAHA	
CANCEL DWG NO.		
REFF DWG NO.		

MECHANICAL ENGINEERING SECTION

TITLE BUCKET ELEVATOR 01

ASSEMBLY SEVEN CHAIN LINK (EXISTING)

SCG | PT SCG LIGHTWEIGHT CONCRETE INDONESIA | A4 | 2012-DWG-RMA-BE01-M-110 | REV NO. | PAGE 1