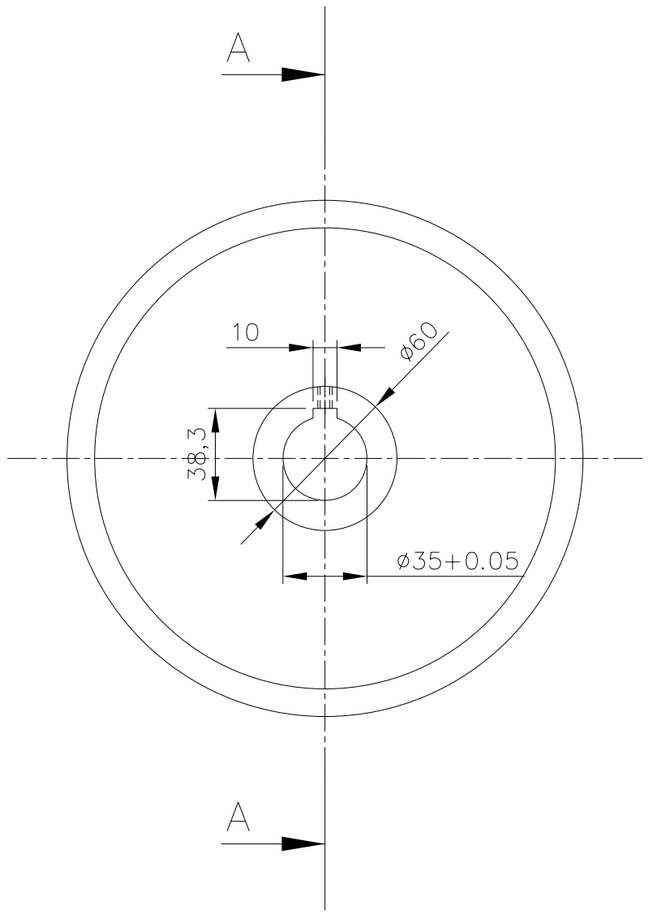

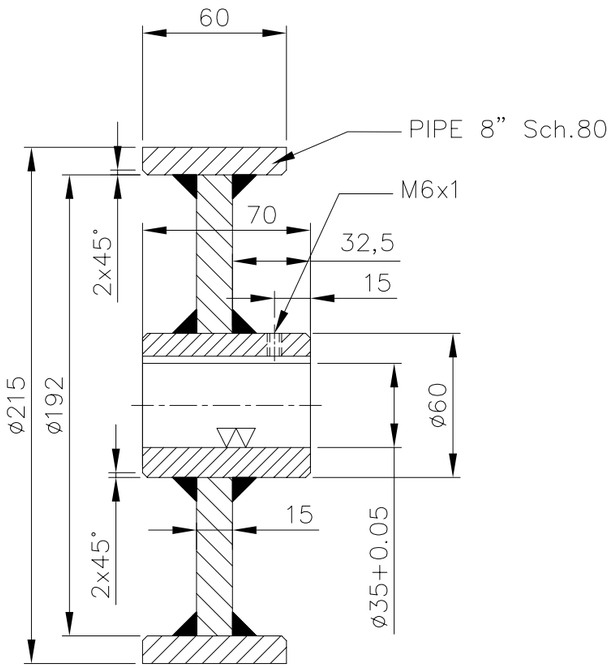

SECTION A–A

Q'TY 1 pcs.

MATERIAL: SS400

DIR/FILE : .				SCALE : 1:5	ASSY.No. : .	
DIM....MM.	NAME	DATE	PROJECT.			
DRAWN	WEERAPHOL P.	31/8/13				
DESIGNED			WHEEL			
CHECKED			FRICTION WHEEL			
APPROVED						
———	PT. SCG LIGHT WEIGHT CONCRETE INDONESIA		A3	10421503	REV. NO. .	PAGE 000