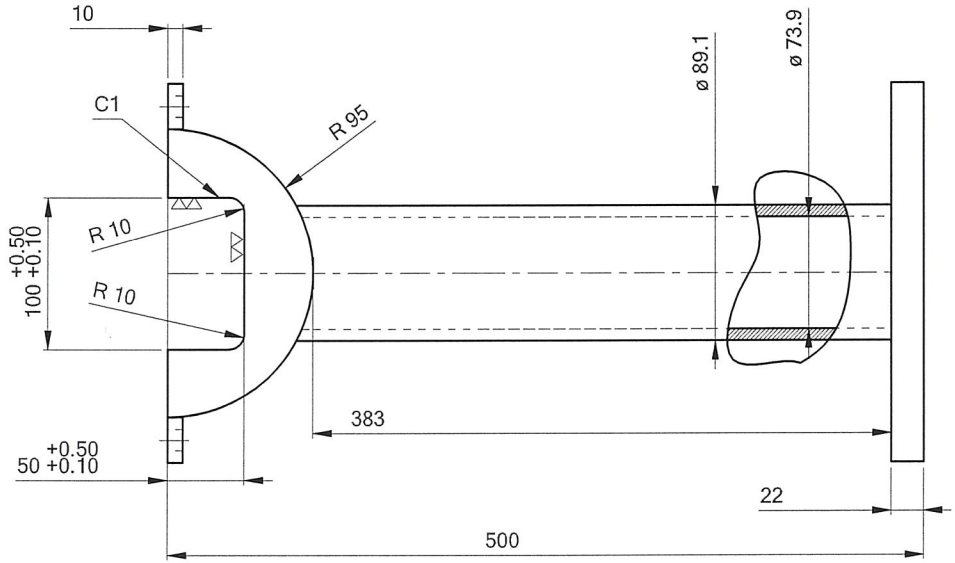

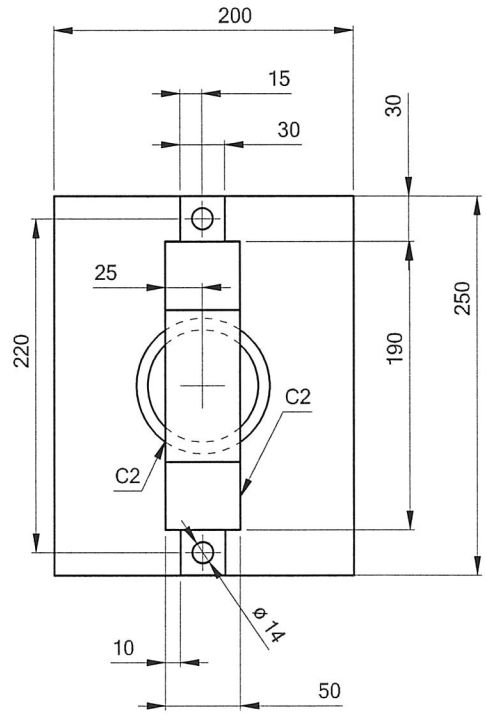

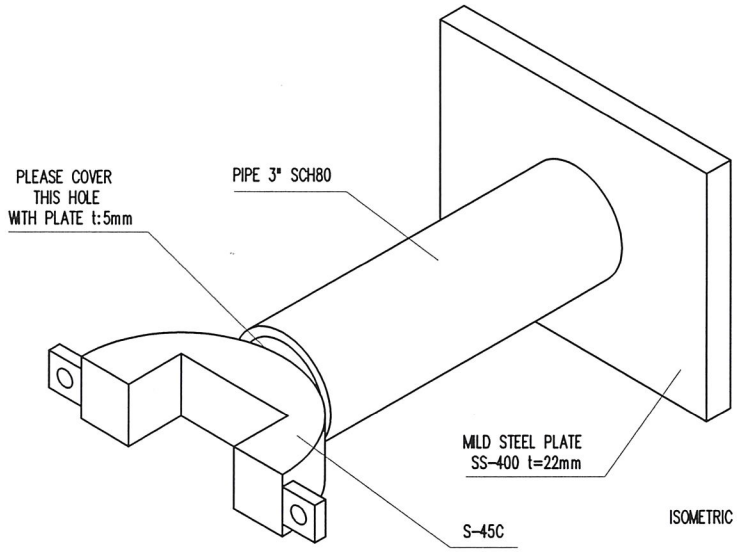

ISOMETRIC VIEW

#NB: WEIGHT = 16.5 KG/PART

** INCOMING PART WILL BE CHECK. IT WILL RETURN IF NOT PASS **

POLISHING	GRINDING	NORMAL MACHINING (SMOOTH SURFACE)	NORMAL MACHINING (ROUGH SURFACE)
▽▽▽▽	▽▽▽	▽▽	▽

POS	DESCRIPTION	QTY	MATERIAL	REMARKS
1	NEW ROUND BLADE	2	S-45C + SS-400	-

FILE DIR: C:\Users\SLCI-D012\Desktop \waste cutting ag

SCALE: 1:5 | DIM: mm | ASSY NO.

DIM: mm	NAME	DATE	SIGN
DRAWN	ENDEN	24/JULY/19	
DESIGN	YESSIKO		
CHECK	YESSIKO		
APRV	M.NUGRAHA		

( )= GENERAL TOLERANSI ±0.2% x DIMENSION

REFF DWG NO.

MECHANICAL ENGINEERING SECTION

TITLE MIXING PLAN - WASTE CUTTING

NEW ROUND BLADE

SCG | PT SCG LIGHTWEIGHT CONCRETE INDONESIA | A4 | 2012-DWG-MPL-WC-M-001-5A | REV NO. — | PAGE 6